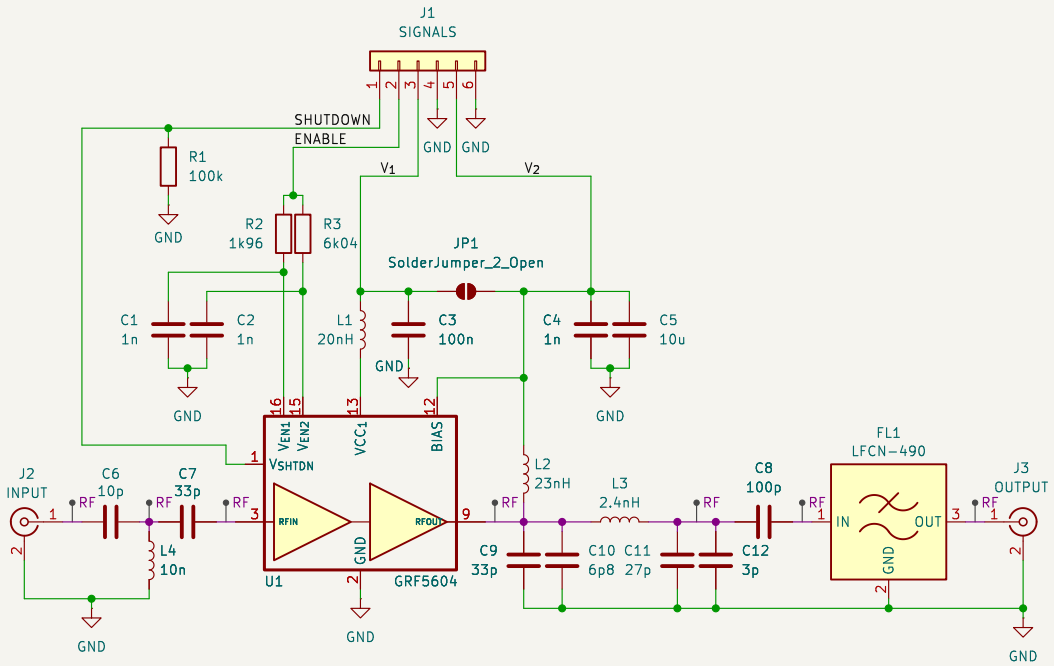

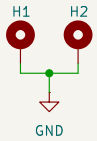

Author: Vlastimil OK5VAS, Wojciech SP5WWP, Andreas OE3ANC
M17 Foundation

Sheet: /
File: LinHT-rf-amp.kicad_sch

Title: LinHT – 397–470 MHz Power Amplifier

Size: A4	Date: 2025-08-18	**Rev: A**
KiCad E.D.A. 9.0.7		Id: 1/1